Indoor unit : KMS0972

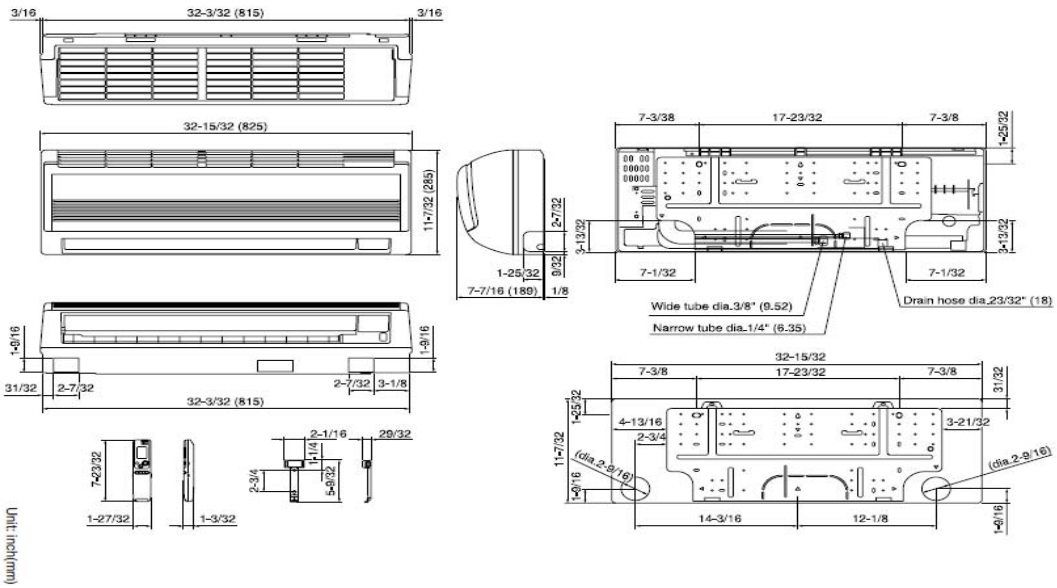

Outdoor Unit **CMH3172**

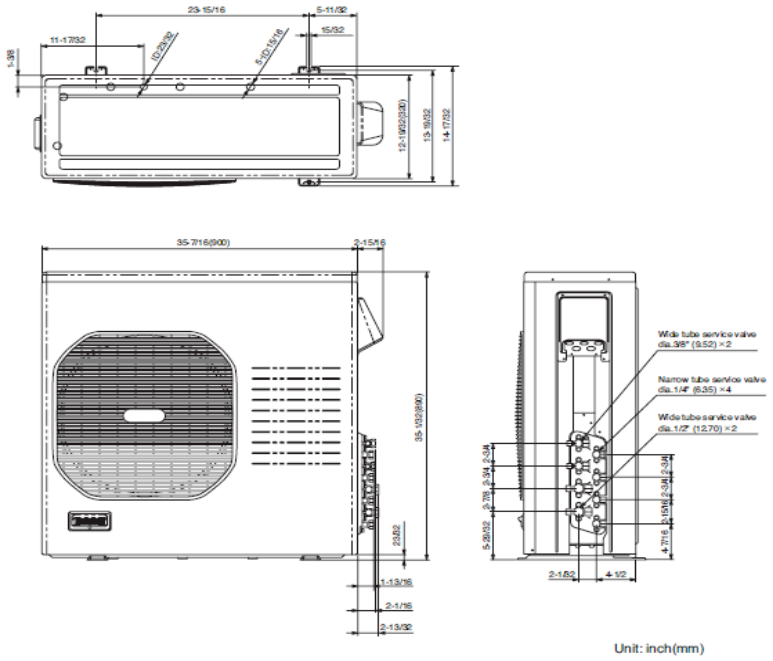

Unit: inch(mm)