Dimensional Data for 18KS72 / 18KLS72

Indoor unit : KS1872

Indoor Unit **KS1872**
KS2472

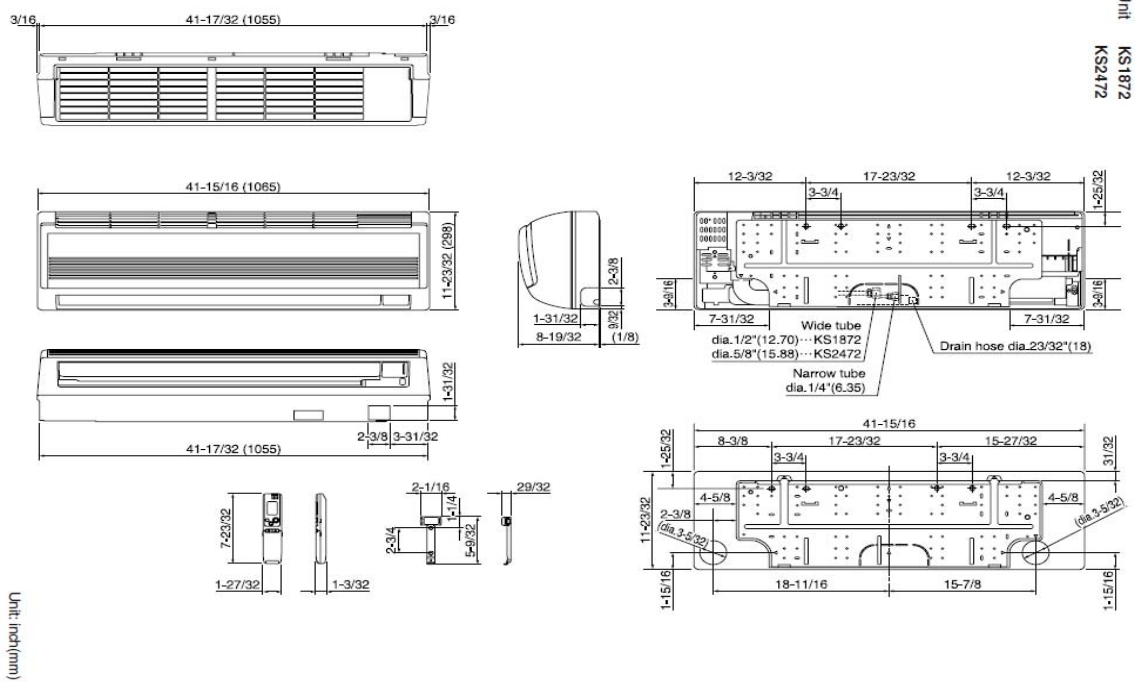

Unit: inch(mm)

Outdoor Unit **C1872**
CL1872

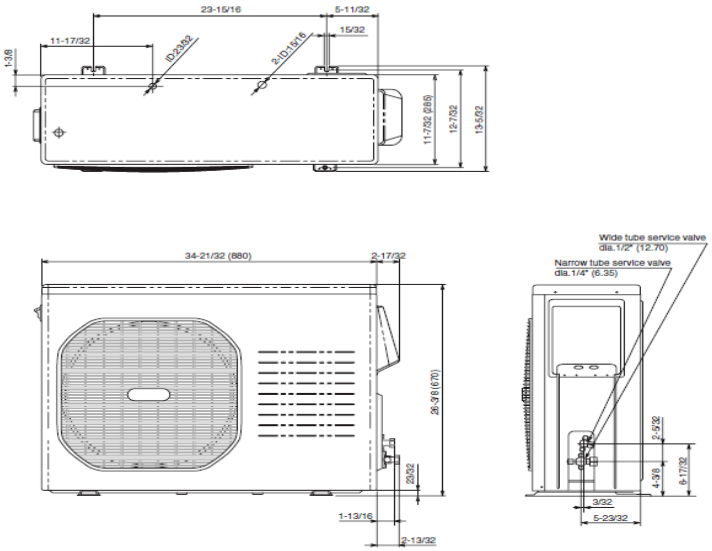

Unit: inch(mm)